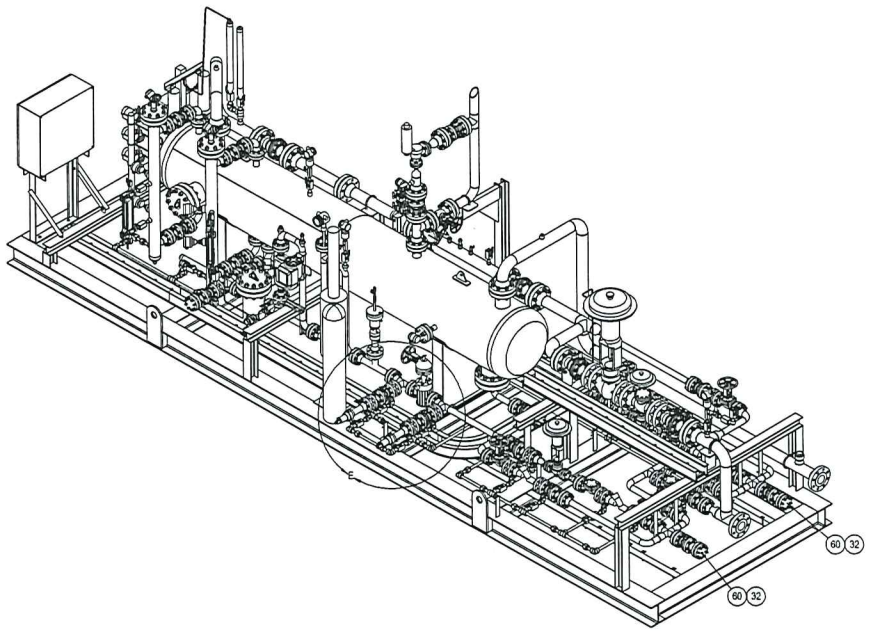

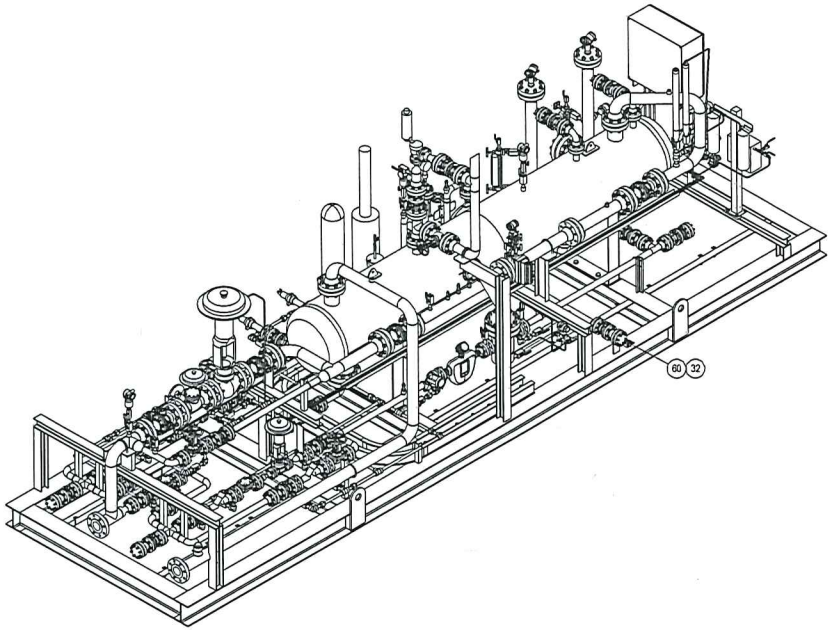

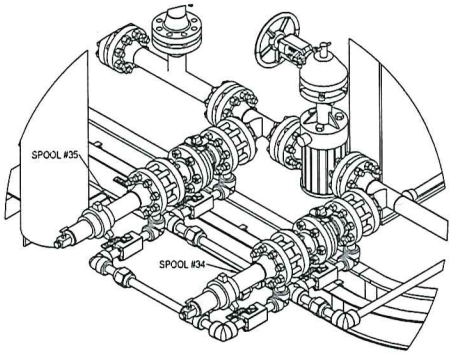

DETAIL E
SCALE 1 : 8

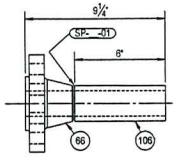

SPOOLS #34, #35

FORUM™ ENERGY TECHNOLOGIES

PROPRIETARY AND CONFIDENTIAL
THIS DRAWING IS THE PROPERTY OF

PRODUCTION EQUIPMENT
3320 N. I-35 GAINESVILLE, TEXAS 76240 AS SUCH IS NOT TO BE DISTRIBUTED UNDER ANY CIRCUMSTANCES FOR DESIGN OR FABRICATION PURPOSES WITHOUT PRIOR WRITTEN CONSENT.

Copyright © FORUM ENERGY TECHNOLOGIES, INC.

TITLE:

TEST SEPARATOR
30" OD X 15'-0" 1440 DP ASME CODE
Forum Part Number: 88000054

DRAWN BY: Ramdy Dmarapika 3/3/2014	CHECKED BY: M. WRIGHT	CUSTOMER: ANADARKO	SIZE: D
JOB NO.	DWG. NO. TTG-140002		REV 0